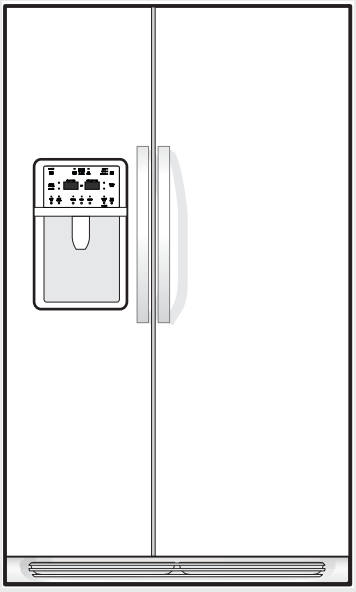

FRIGIDAIRE

Factory Parts Catalog

Product No.	LGUS2642LE0	LGUS2642LF0	LGUS2642LM0	LGUS2642LP0
Color	black (smooth)	stainless	silver mist	white (smooth)
Volts	115	115	115	115
Wiring Diagram	242077101	242077101	242077101	242077101
Owner's Guide	242063600	242063600	242063600	242063600
Market	North America	North America	North America	North America
Energy Guide	242028566	242028566	242028566	242028566
Service Data Sheet	240389640	240389640	240389640	240389640

Frigidaire
P.O. BOX 212378
AUGUSTA, GA 30917

SIDE-BY-SIDE REFRIGERATOR

Model No.
LGUS2642L

Publication No.
5995566667
10/05/18
(EN/SERVICE/KHB)
137

FREEZER DOOR

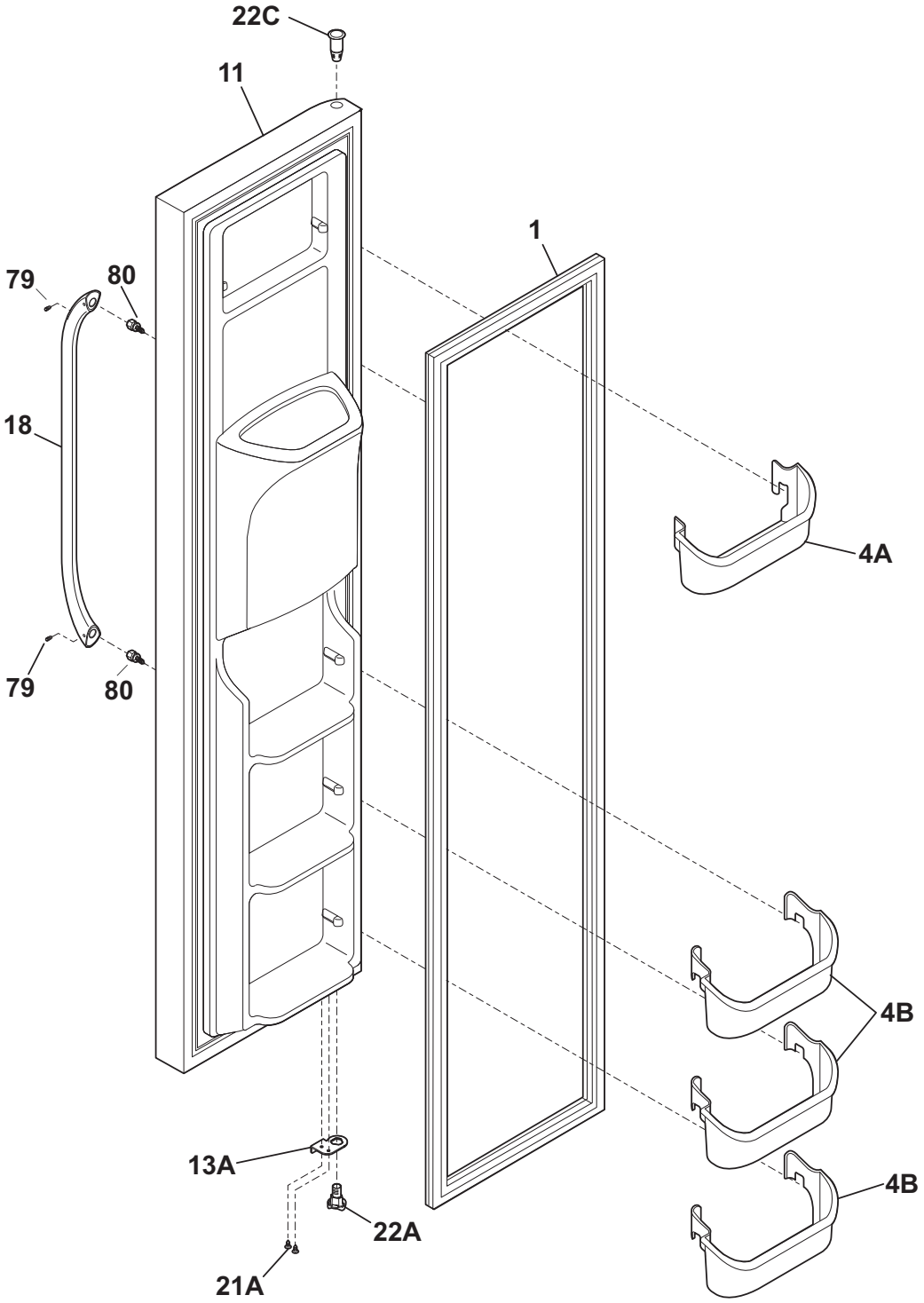

N58FTDEBC2

FREEZER DOOR

Model Index: A LGUS2642L (LGUS2642LE0)
B LGUS2642L (LGUS2642LF0)
C LGUS2642L (LGUS2642LM0)
D LGUS2642L (LGUS2642LP0)

POS. NO	PART NO.					DESCRIPTION
1	241786006	A	-	-	-	Gasket-frzr door, black, magnetic
1 #	241786010	-	B	C	-	Gasket-frzr door, grey, magnetic
1	241786002	-	-	-	D	Gasket-frzr door, white, magnetic
4A	240334201	A	B	C	D	Bin-door, frzr-upper
4B	240351601	A	B	C	D	Bin-door
11	242026454	A	-	-	-	Door-frzr, black (smooth), complete assy
11	242026456	-	B	-	-	Door-frzr, stainless, complete assy
11	242026461	-	-	C	-	Door-frzr, silver mist, complete assy
11	242026453	-	-	-	D	Door-frzr, white (smooth), complete assy
13A	241990202	A	B	C	D	Door Stop, black, frzr
18	242084503	A	-	-	-	Handle-door, black, refr
18	241930101	-	B	C	-	Handle-door, stainless
18	242084501	-	-	-	D	Handle-door, white, refr
18*	241601002	A	B	C	D	Wrench, allen
18*	241701902	A	B	C	D	Screwdriver-3/32" balldriver
21A	240442706	A	B	C	D	Screw-#10-32 X 3/4, zinc
22A	241990302	A	B	C	D	Bearing-hinge(frz), closer
22C	241760402	A	-	-	-	Bearing, hinge, top
22C	241760401	-	B	C	D	Bearing, hinge, top
79	218755408	A	-	-	D	Screw-set, 10-32 x 0.650
79	218755405	-	B	C	-	Screw-set, 10-32 x 0.650
80	218755504	A	B	C	D	Screw-shoulder, #10 AB, handle mounting
*	242103001	A	B	C	D	Connector-water, straight
*	240451503	A	B	C	D	Screw, ind hex wshr hd, 8-32 x 0.375, trilobe
* #	241834703	A	B	C	D	Harness-wiring, door
*	5303918371	A	B	C	D	Dispenser heater kit, 115

Functional Parts
* Non-Illustrated Parts

REFRIGERATOR DOOR

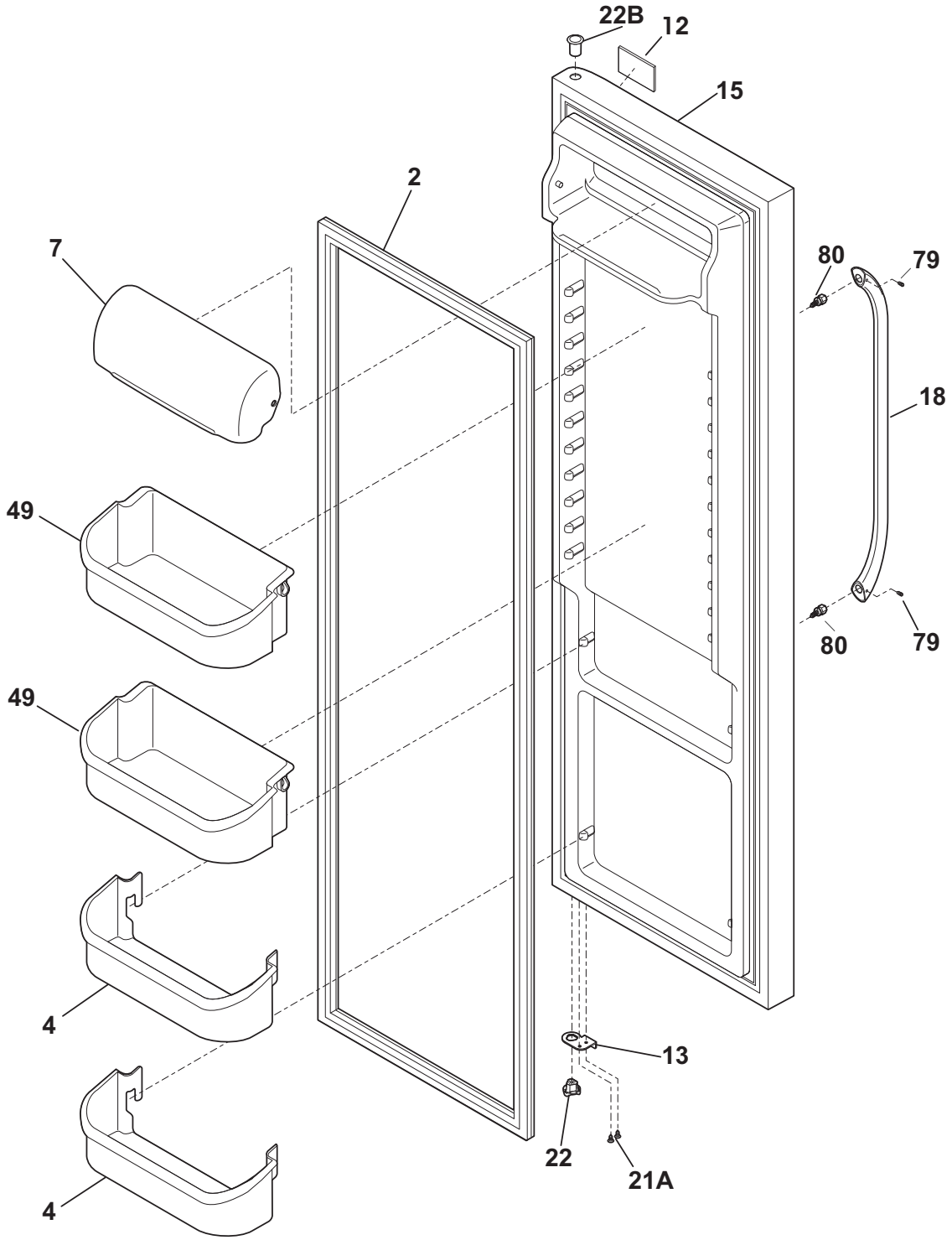

N58RTDACB3

REFRIGERATOR DOOR

Model Index: A LGUS2642L (LGUS2642LE0)
B LGUS2642L (LGUS2642LF0)
C LGUS2642L (LGUS2642LM0)
D LGUS2642L (LGUS2642LP0)

POS. NO	PART NO.					DESCRIPTION
2	241786005	A	-	-	-	Gasket-refr door, black, magnetic
2 #	241786009	-	B	C	-	Gasket-refr door, grey, magnetic
2	241786001	-	-	-	D	Gasket-refr door, white, magnetic
4	240323002	A	B	C	D	Bin-door, pseudo, clear, bottom
7	240326203	A	B	C	D	Door-dairy
12	242015201	A	B	C	D	Label-nameplate
13	241990201	A	B	C	D	Door Stop, black, ref
15	242038848	A	-	-	-	Door-refr, black (smooth), complete assy
15	242038850	-	B	-	-	Door-refr, stainless, complete assy
15	242038860	-	-	C	-	Door-refr, silver mist, complete assy
15	242038847	-	-	-	D	Door-refr, white (smooth), complete assy
18	242084503	A	-	-	-	Handle-door, black, refr
18	241930101	-	B	C	-	Handle-door, stainless
18	242084501	-	-	-	D	Handle-door, white, refr
18*	241601002	A	B	C	D	Wrench, allen
18*	241701902	A	B	C	D	Screwdriver-3/32" balldriver
21A	240442706	A	B	C	D	Screw-#10-32 X 3/4, zinc
22	241990301	A	B	C	D	Bearing-hinge, gray
22B	241760404	A	-	-	-	Bearing, hinge, top
22B	241760403	-	B	C	D	Bearing, hinge, top
49	240356402	A	B	C	D	Bin-door, gallon
79	218755408	A	-	-	D	Screw-set, 10-32 x 0.650
79	218755405	-	B	C	-	Screw-set, 10-32 x 0.650
80	218755504	A	B	C	D	Screw-shoulder, #10 AB, handle mounting

Functional Parts
* Non-Illustrated Parts

CABINET

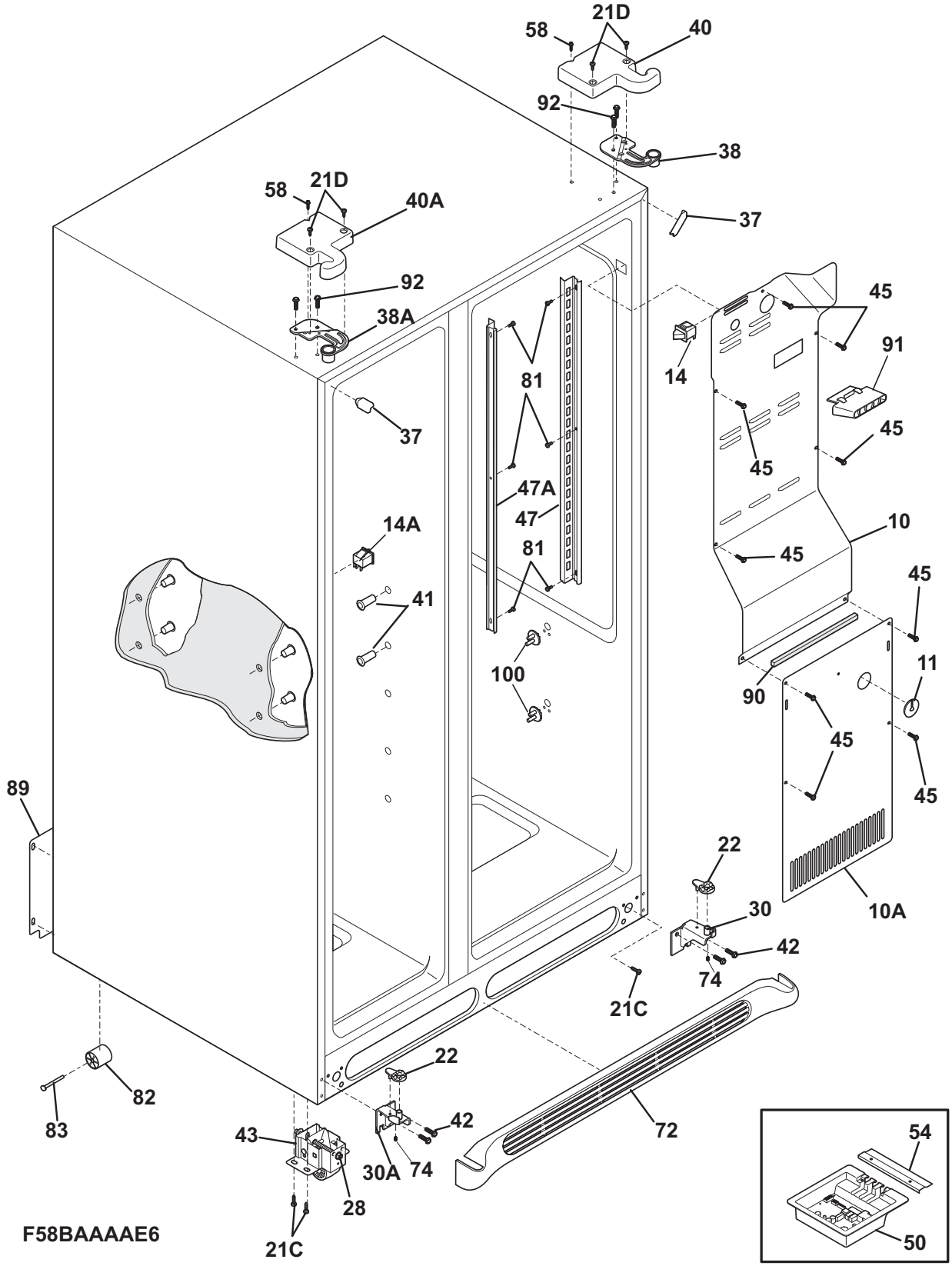
21D
58
40
92
38
58
21D
40A
37
92
38A
45
91
14
81
37
45
45
47A
47
10
14A
81
45
45
41
100
11
90
45
45
89
22
30
10A
42
74
21C
22
82
83
42
43
72
30A
74
28
21C
54
50
F58BAAAAE6

CABINET

Model Index: A LGUS2642L (LGUS2642LE0)
B LGUS2642L (LGUS2642LF0)
C LGUS2642L (LGUS2642LM0)
D LGUS2642L (LGUS2642LP0)

POS. NO	PART NO.					DESCRIPTION
10	240435912	A	B	C	D	Cover-air duct
10A	241719711	A	B	C	D	Cover-evap coil, lower
11	5303208309	A	B	C	D	Plug-hole, factory test
14 #	240505801	A	B	C	D	Switch, light/lamp
14A	242060201	A	B	C	D	Switch-light/lamp, frzr door
21C	218252201	A	B	C	D	Screw, #8 truss hd, 10-32CA x 0.500
21D	218781101	A	B	C	D	Screw, pan head, 8-18 x 0.625
22	241917801	A	B	C	D	Plate-door closer
28	240335502	A	B	C	D	Bolt-roller adj, hex washer head, 1/4-20 x 4.020, (2), special
30	241917901	A	B	C	D	Bracket-lower hinge, RH, w/hinge pin
30A	241917902	A	B	C	D	Bracket-lower hinge, LH, w/hinge pin
37	240337610	A	-	-	-	Trim-cabinet corner, black, (2)
37	240337615	-	B	C	-	Trim-cabinet corner, gray, (2)
37	240337608	-	-	-	D	Trim-cabinet corner, white, (2)
38	241761301	A	B	C	D	Bracket-upper hinge, RH
38A	241761302	A	B	C	D	Bracket-upper hinge, LH
40	241946715	A	-	-	-	Cover-upper hinge, black, RH
40	241946717	-	B	C	-	Cover-upper hinge, gray, RH
40	241946711	-	-	-	D	Cover-upper hinge, white
40A	241946716	A	-	-	-	Cover-upper hinge, black, LH
40A	241946718	-	B	C	-	Cover-upper hinge, gray
40A	241946712	-	-	-	D	Cover-upper hinge, white
41	241550801	A	B	C	D	Grommet-shelf mtg, 1.40" long
41*	241550701	A	B	C	D	Grommet-shelf mtg, .96" long
42	240578902	A	B	C	D	Screw, hex head, 1/4-20 x 5/8
43	240335006	A	B	C	D	Roller Assy, front, (2)
45	241500303	A	B	C	D	Screw, hex washer head, 8-18AB x 0.500
47	242001902	A	B	C	D	Channel-shelf mtg, side, LH
47A	242001901	A	B	C	D	Channel-shelf mtg, side, RH
50	242009029	A	B	C	D	Board-main power
54	241532401	A	B	C	D	Channel
58	241548003	A	B	C	D	Screw, 10-32 x 3/8
72	241969403	A	-	-	-	Grille/Kickplate, black
72	241969405	-	B	C	-	Grille/Kickplate
72	241969401	-	-	-	D	Grille/Kickplate, white
74	218755402	A	B	C	D	Screw-set, 10-32 x 0.375
81	5304455650	A	B	C	D	Screw, hex washer head, 8-15A x 0.625, Low Profile
82	5304418225	A	B	C	D	Roller, compressor base, rear, (2)
83	5304455655	A	B	C	D	Rivet, flat head, 1/4 OD x 1-3/4, roller pin
89	241733902	A	B	C	D	Cover-access, w/label
90	218249808	A	B	C	D	Seal-coil cover
91	240380101	A	B	C	D	Duct-ice maker
92	241710601	A	B	C	D	Screw, hex washer hd, 1/4 x 7/8, hinge mtg
100	241993101	A	B	C	D	Support-crisper cvr
100*	241993001	A	B	C	D	Support-crisper cvr
*	241868101	A	B	C	D	Air Guide
*	241890601	A	B	C	D	Deflector-air
*	5303321321	A	-	-	-	Paint, touch-up, black
*	5303321319	-	-	-	D	Paint, touch-up, white

Functional Parts
* Non-Illustrated Parts

SHELVES

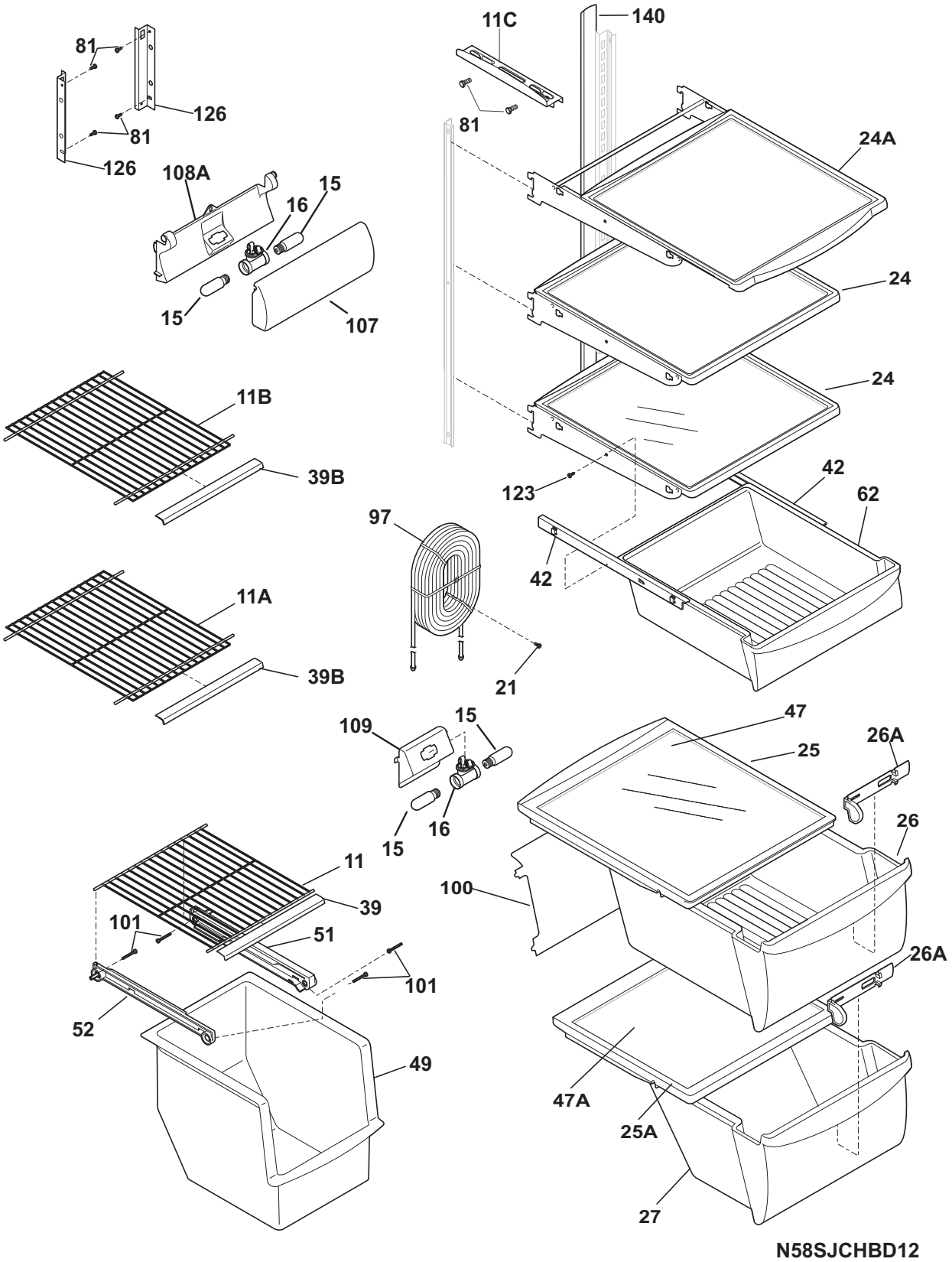
81
126
81
126
108A
15
16
15
107
11C
140
81
24A
24
24
11B
39B
123
42
62
97
42
11A
39B
21
109
15
15
16
47
25
26A
26
11
39
100
101
51
101
26A
52
49
47A
25A
27
N58SJCHBD12

SHELVES

Model Index: A LGUS2642L (LGUS2642LE0)
B LGUS2642L (LGUS2642LF0)
C LGUS2642L (LGUS2642LM0)
D LGUS2642L (LGUS2642LP0)

POS. NO	PART NO.					DESCRIPTION
11	241657602	A	B	C	D	Shelf, flip up, wire
11A	241657502	A	B	C	D	Shelf, fixed, freezer
11B	241657504	A	B	C	D	Shelf, fixed, upper, freezer
11C	240324101	A	B	C	D	Shelf-pizza
15	241552801	A	B	C	D	Light Bulb
16	241622802	A	B	C	D	Socket-light, frz light
16*	240570304	A	B	C	D	Tape, aluminum, 3" wide
16*	241987601	A	B	C	D	Harness-wiring
21	5304455658	A	B	C	D	Screw, hx wshr hd sems, 8-15A x 0.625
24	240355256	A	B	C	D	Shelf-"Spill-Safe", fixed
24A	240350136	A	B	C	D	Shelf-"Spill-Safe", cantilever, sliding
25	240599301	A	B	C	D	Cover-crisper pan, upper
25*	240362101	A	B	C	D	Clip-slide, cover-crisper
25A	240350903	A	B	C	D	Cover-crisper pan, lower
26	240351061	A	B	C	D	Pan-crisper, upper
26*	240349801	A	B	C	D	Clip-slide, pan-crisper
26*	241595202	A	B	C	D	Clip-slide, pan-crisper
26A	240362201	A	B	C	D	Control-humidity
27	240351240	A	B	C	D	Pan-crisper, lower
39	240430706	A	B	C	D	Trim-shelf, 11.21", front
39B	240430702	A	B	C	D	Trim-shelf, 12.39", front
42	240356501	A	B	C	D	Track, meat pan hanger, RH
42	240365401	A	B	C	D	Track, meat pan hanger, LH
47	240350649	A	B	C	D	Insert-pan cover, glass
47A	240350603	A	B	C	D	Insert-pan cover, glass
49	240564401	A	B	C	D	Basket-sliding
51	240343002	A	B	C	D	Hanger-basket, RH
52	240343102	A	B	C	D	Hanger-basket, LH
62	240342830	A	B	C	D	Pan-meat
81	5304455650	A	B	C	D	Screw, hex washer head, 8-15A x 0.625, Low Profile
97	241532007	A	B	C	D	Water Tank
100	240326304	A	B	C	D	Cover-water tank
101	218493101	A	B	C	D	Screw, hex washer head, 8-18AB x 1-3/4
107	241753601	A	B	C	D	Shield-light, upper
108A	241753701	A	B	C	D	Housing-light, upper, fresh food
109	241513202	A	B	C	D	Base-crisper light socket
123	215005101	A	B	C	D	Screw, hanger/rlr mtg, 8-10 x 7/16
126	241674401	A	B	C	D	Channel, auger mtg, LH
126	241674402	A	B	C	D	Channel, auger mtg, RH
140	241812502	A	B	C	D	Channel, wtr tube cover
*	241868101	A	B	C	D	Air Guide
*	242028566	A	B	C	D	Energy Guide

CONTROLS

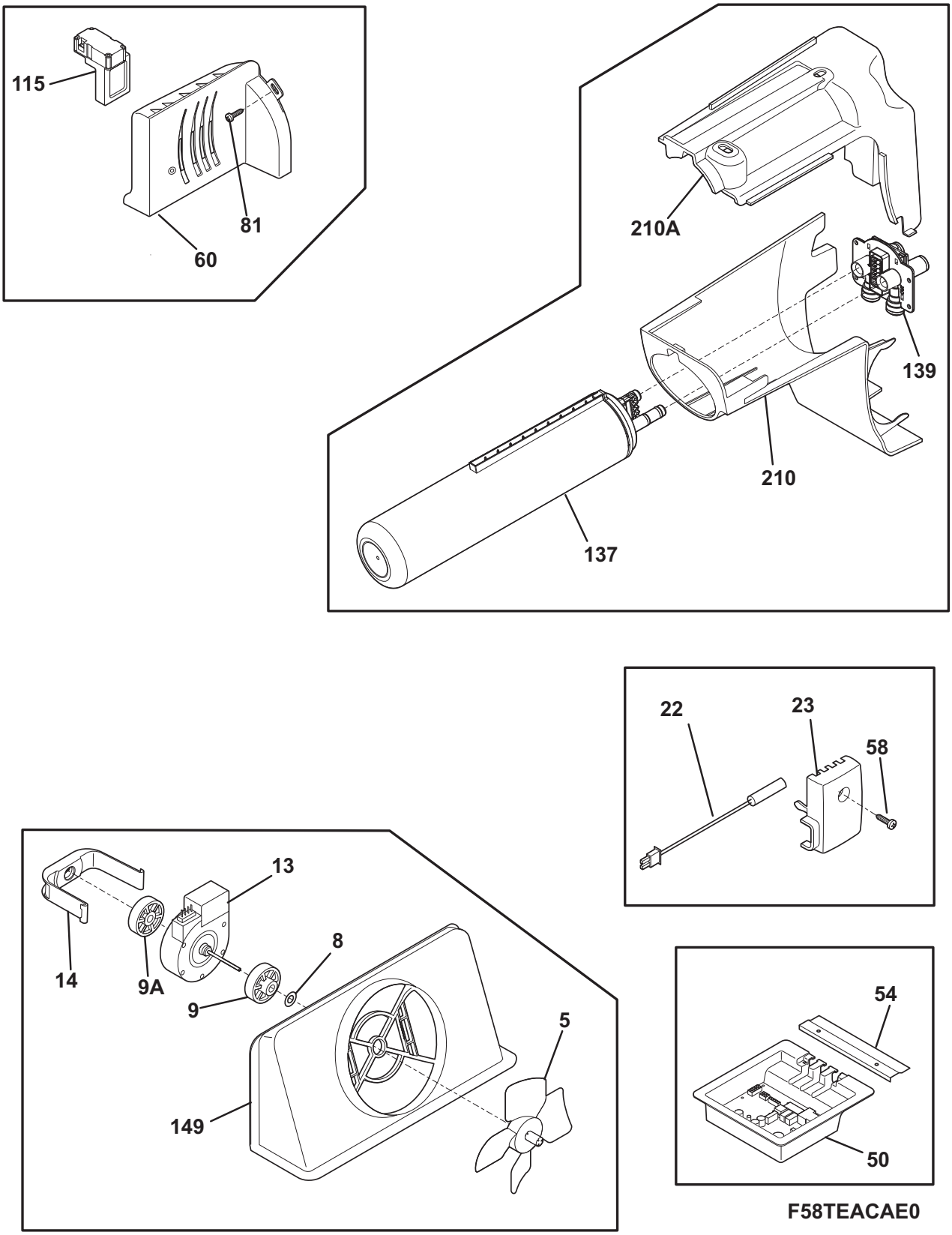

F58TEACAE0

CONTROLS

Model Index: A LGUS2642L (LGUS2642LE0)
B LGUS2642L (LGUS2642LF0)
C LGUS2642L (LGUS2642LM0)
D LGUS2642L (LGUS2642LP0)

POS. NO	PART NO.					DESCRIPTION
5 #	5308000010	A	B	C	D	Fan Blade, red, evaporator fan
8	215474201	A	B	C	D	Washer, "slinger", nylon, evap fan shaft
9	241563601	A	B	C	D	Bushing-motor mtg
9A	241845301	A	B	C	D	Bushing-motor mtg
13	241509402	A	B	C	D	Motor, evaporator fan
14	241517701	A	B	C	D	Clip, evap fan motor
22	240597203	A	B	C	D	Sensor
23	241845401	A	B	C	D	Housing-sensor
50	242009029	A	B	C	D	Board-main power
54	241532401	A	B	C	D	Channel
58	5304455650	A	B	C	D	Screw, hex washer head, 8-15A x 0.625, Low Profile
60	241794301	A	B	C	D	Diffuser-air
60*	241945101	A	B	C	D	Insulation-air duct
81	5304455658	A	B	C	D	Screw, hx wshr hd sems, 8-15A x 0.625
115	241853801	A	B	C	D	Damper Assy, w/seal
137	242069601	A	B	C	D	Filter-water, carbon
139	242009601	A	B	C	D	Base-water filter
149	241563501	A	B	C	D	Shroud-fan orfice
149*	241528306	A	B	C	D	Seal, shroud
210	241983803	A	B	C	D	Housing-water filtr
210A	241998302	A	B	C	D	Mount-water filter
*	3205266	A	B	C	D	Edge Protector, wiring harness
*	241852501	A	B	C	D	Clip, wiring harness

Functional Parts
* Non-Illustrated Parts

SYSTEM

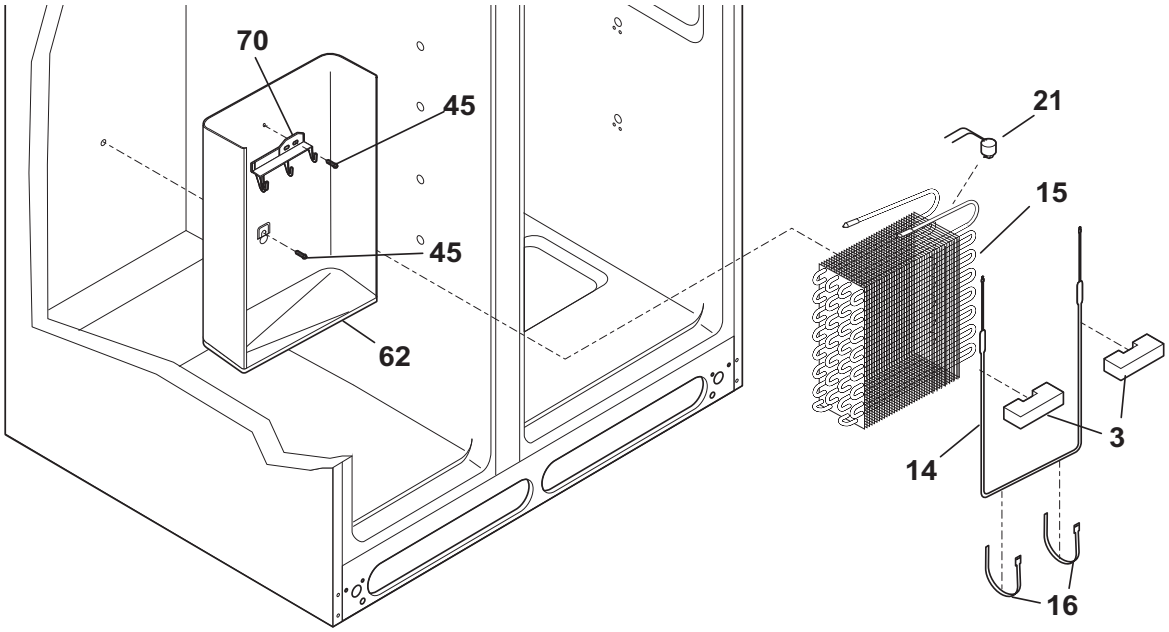
70
45
45
62
21
15
3
14
16

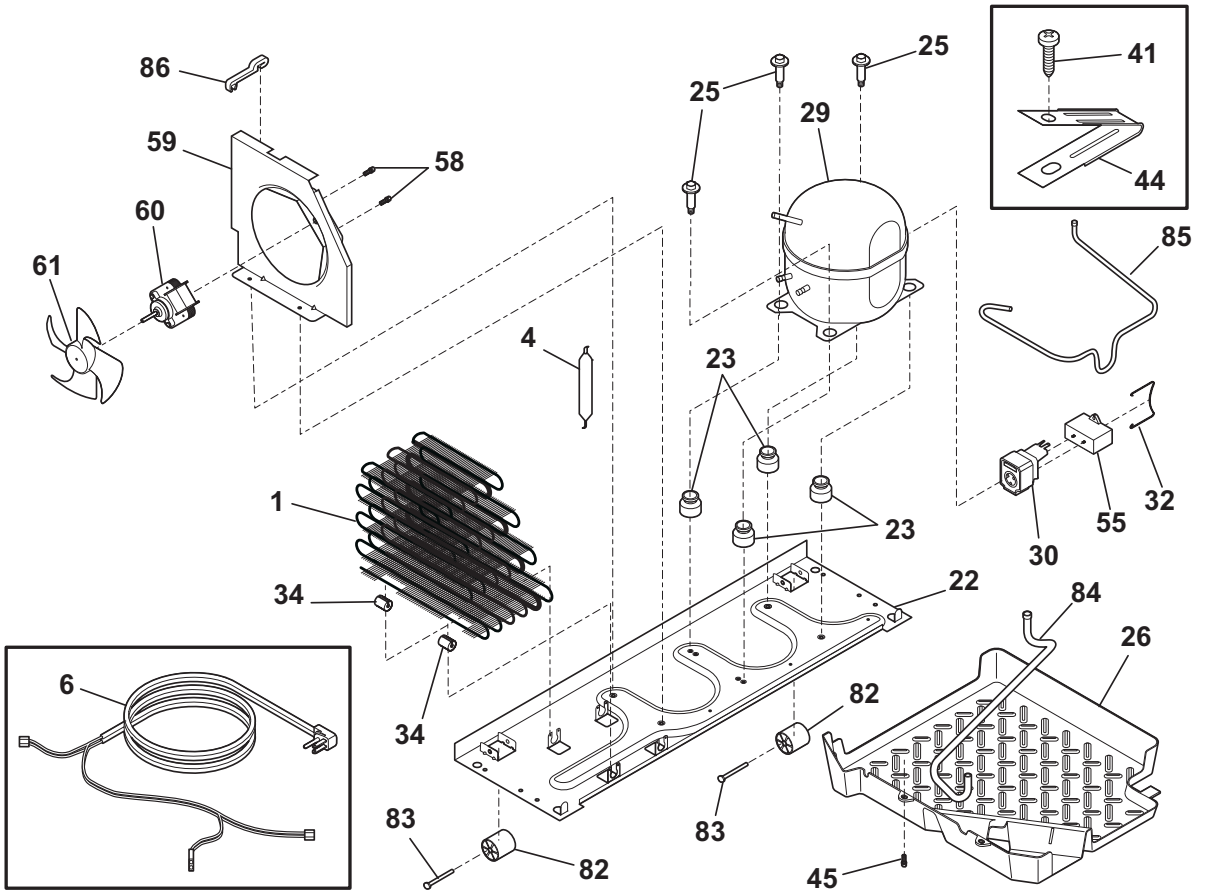
86
59
58
60
61
25
25
29
41
44
85
4
23
23
1
34
34
6
22
84
26
82
83
83
82
45
55
32
30
E58CAAAAC1

SYSTEM

Model Index: A LGUS2642L (LGUS2642LE0)
B LGUS2642L (LGUS2642LF0)
C LGUS2642L (LGUS2642LM0)
D LGUS2642L (LGUS2642LP0)

POS. NO	PART NO.					DESCRIPTION
1 #	242106601	A	B	C	D	Condenser
3	218679607	A	B	C	D	Block-evap coil, styrofoam, (2)
4 #	242047601	A	B	C	D	Drier-filter
6 #	241516901	A	B	C	D	Cord-service
6*	242008702	A	B	C	D	Harness-wiring, machine compt
6* #	241519902	A	B	C	D	Harness-wiring
14 #	242044113	A	B	C	D	Heater-defrost
15 #	5303918480	A	B	C	D	Evaporator Kit
16	5308000110	A	B	C	D	Strap-evap/heater, aluminum, (2)
21 #	5303918214	A	B	C	D	Thermostat-defrost, kit
22	240330011	A	B	C	D	Base-compressor mtg
22*	218252201	A	B	C	D	Screw, #8 truss hd, 10-32CA x 0.500
23	218513300	A	B	C	D	Grommet-compr mtg, (4)
25	240491503	A	B	C	D	Screw-compressor mtg, 1/4-28 x 1.16, (4)
25*	241812301	A	B	C	D	Washer-compr mtg
26	241697602	A	B	C	D	Pan-defrost
29 #	240550922	A	B	C	D	Compressor, w/o electricals
30 #	241941003	A	B	C	D	Starter
32	241982601	A	B	C	D	Clamp, elec cont mtg, compressor
34	240405201	A	B	C	D	Grommet, rubber, black, cond tube/wire
41	240555002	A	B	C	D	Screw-#8-32 X 3/8
44	215174700	A	B	C	D	Clamp-service cord, strain relief, galv steel
45	5304455650	A	B	C	D	Screw, hex washer head, 8-15A x 0.625, Low Profile
55	218909913	A	B	C	D	Capacitor, run, 220 VAC, 15 microfarad
58	240569201	A	B	C	D	Screw, 8-18 x 0.500
59	241946106	A	B	C	D	Shroud-cond fan
59*	240346701	A	B	C	D	Tape-foam seal, shroud
59*	240359403	A	B	C	D	Screw-fan shroud, (2)
60 #	241584301	A	B	C	D	Motor-condenser fan
61	241639501	A	B	C	D	Blade-condenser fan
62	240429405	A	B	C	D	Trough-drain
70	218990801	A	B	C	D	Bracket-evap/cvr mtg
82	5304418225	A	B	C	D	Roller, compressor base, rear, (2)
83	5304455655	A	B	C	D	Rivet, flat head, 1/4 OD x 1-3/4, roller pin
84	241957901	A	B	C	D	Tube-drain, lower
85	241856903	A	B	C	D	Tube-connector, suction
86	240409302	A	B	C	D	Spacer-cond tube, black
*	241852501	A	B	C	D	Clip, wiring harness
* #	5303918327	A	B	C	D	Heat Exchanger Kit, suction line
*	5303918222	A	B	C	D	Hot Tube Repair Kit, service

ICE & WATER DISPENSER

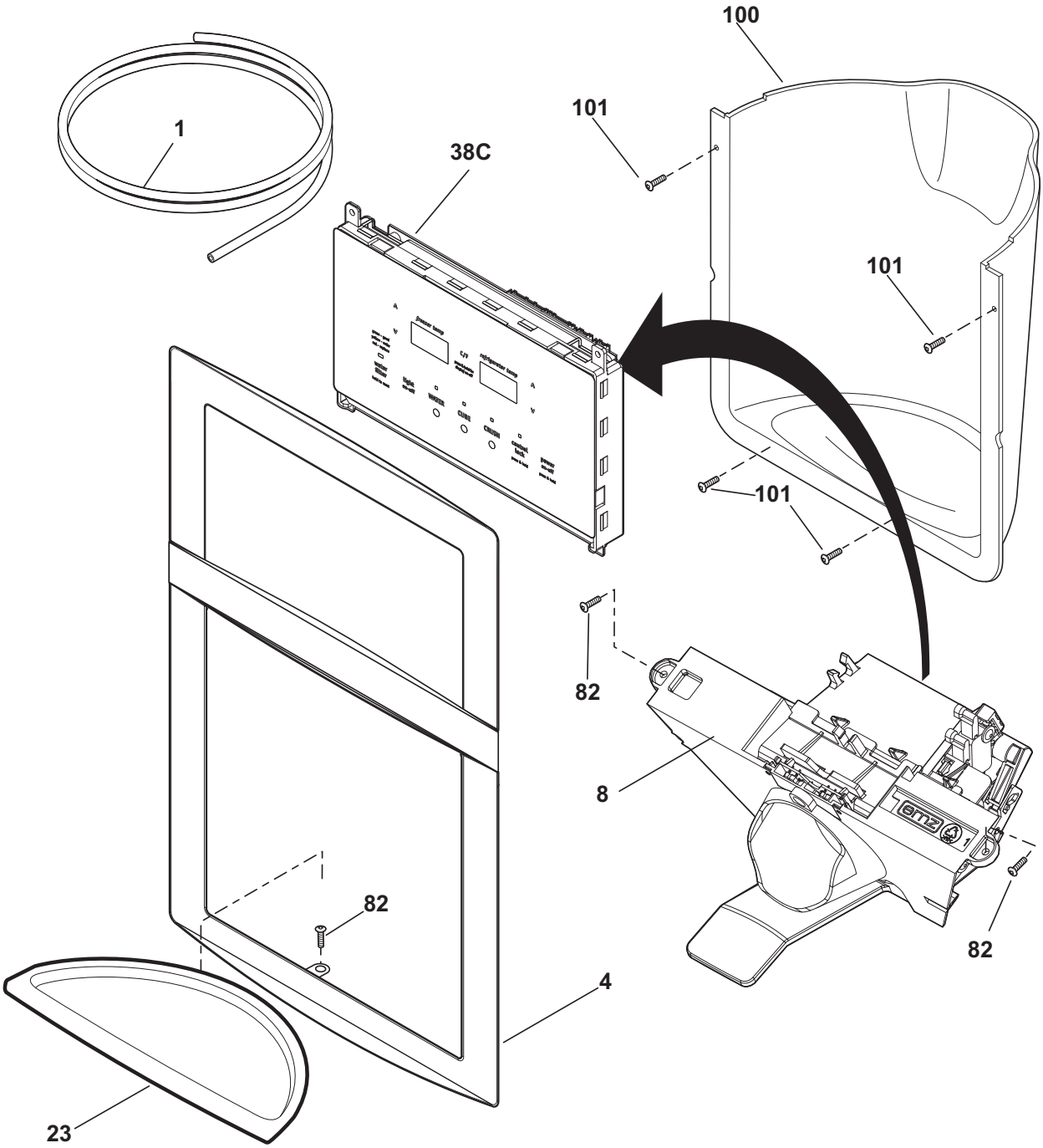

F58XFCBAA0

ICE & WATER DISPENSER

Model Index: A LGUS2642L (LGUS2642LE0)
B LGUS2642L (LGUS2642LF0)
C LGUS2642L (LGUS2642LM0)
D LGUS2642L (LGUS2642LP0)

POS. NO	PART NO.					DESCRIPTION
1	218976409	A	B	C	D	Tube, water, door
1*	218976419	A	B	C	D	Tube-water inlet, valve to door
1*	218976429	A	B	C	D	Tube-water inlet, 97.50", brown/tan
1*	218976915	A	B	C	D	Tube-water inlet, inlet valve, to I/M inlet
1*	240561701	A	B	C	D	Seal-water inlet, inlet valve, to ice maker
4	242089602	A	-	-	-	Cover-module, black
4	242089603	-	B	C	-	Cover-module, gray
4	242089601	-	-	-	D	Cover-module, white
8	241753408	A	-	-	-	Module-dispenser, black
8	242074205	-	B	C	-	Module-dispenser
8	241753409	-	-	-	D	Module-dispenser, white
23	242092403	A	-	-	-	Drip Tray, black
23	242092404	-	B	C	-	Drip Tray, gray
23	242092401	-	-	-	D	Drip Tray, white
38C#	242114904	A	B	C	-	Board-control
38C#	242114903	-	-	-	D	Board-control
82	240363403	A	B	C	D	Screw, 8-18 x 0.500, 2
100	241753302	A	-	-	-	Liner-ice dispenser, black
100	241753304	-	B	C	-	Liner-sump, gray
100	241753303	-	-	-	D	Liner-sump, white
101	240363402	A	B	C	D	Screw, plask, #8-18 x .500
*	5303918371	A	B	C	D	Dispenser heater kit, 115

ICE CONTAINER

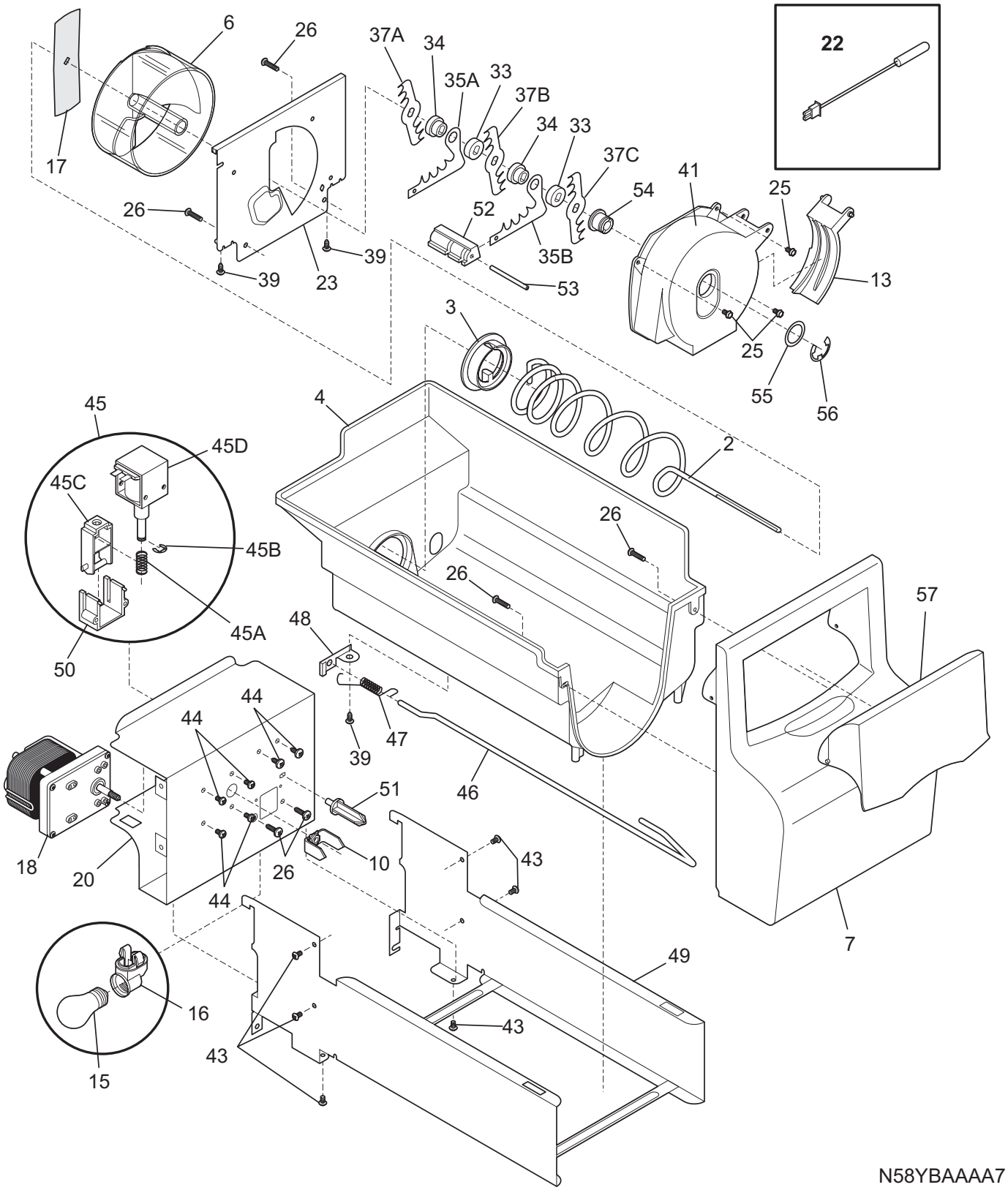

N58YBAAAA7

ICE CONTAINER

Model Index: A LGUS2642L (LGUS2642LE0)
B LGUS2642L (LGUS2642LF0)
C LGUS2642L (LGUS2642LM0)
D LGUS2642L (LGUS2642LP0)

POS. NO	PART NO.					DESCRIPTION
2	241716101	A	B	C	D	Auger-ice
3	241685201	A	B	C	D	Cam-drive
4	241734001	A	B	C	D	Container-ice, bucket only
6	241685101	A	B	C	D	Drum-ice disp
7	241734202	A	B	C	D	Front-ice container
10	241726501	A	B	C	D	Bar-drive
13	241685301	A	B	C	D	Gate
15	241555401	A	B	C	D	Light Bulb
16	241559801	A	B	C	D	Socket-light
17	241684501	A	B	C	D	Drive Blade
18	241676201	A	B	C	D	Motor-auger
18*	241522901	A	B	C	D	Harness-wiring, icmkr/container
20	241734902	A	B	C	D	Cover, motor
22	240597203	A	B	C	D	Sensor
22*	241519401	A	B	C	D	Clip, sensor
23	241684001	A	B	C	D	Plate-front
25	241690701	A	B	C	D	Screw, hex washer head, 8-32T x 0.375
26	215503205	A	B	C	D	Screw, cr pan hd, 10-16 x 0.500
33	241684801	A	B	C	D	Spacer
34	241689801	A	B	C	D	Spacer
35A	241684301	A	B	C	D	Fixed Blade, round
35B	241684201	A	B	C	D	Fixed Blade, square
37A	241684101	A	B	C	D	Blade, crusher #1
37B	241684102	A	B	C	D	Blade, crusher #2
37C	241684103	A	B	C	D	Blade, crusher #3
39	241690501	A	B	C	D	Screw
41	241685601	A	B	C	D	Housing-crusher
43	218359202	A	B	C	D	Screw, pan head, 8-32 x 0.250
44	241842101	A	B	C	D	Screw, 8-32 x 1/4
45 #	241675701	A	B	C	D	Solenoid Assy, 115V
45A	241675901	A	B	C	D	Spring-solenoid
45B	241676001	A	B	C	D	E-Ring-solenoid
45C	241676101	A	B	C	D	Actuator-solenoid
45D#	241675801	A	B	C	D	Solenoid, 115V
46	241716002	A	B	C	D	Control Rod
47	241731801	A	B	C	D	Spring-control rod
48	241684602	A	B	C	D	Bracket-control rod
49	241734501	A	B	C	D	Rail Assy
50	241675601	A	B	C	D	Guide-solenoid
51	241676301	A	B	C	D	Rotation Stop
52	241684901	A	B	C	D	Spacer-fixed blades
53	241690402	A	B	C	D	Pin-spiral, fixed blades
54	241685001	A	B	C	D	Nut-auger
55	241690306	A	B	C	D	Washer
56	241690201	A	B	C	D	E-ring
57	241734101	A	B	C	D	Door-access
*	240507202	A	B	C	D	Deflector-ice container
*	241860812	A	B	C	D	Ice Container Assy, w/moving parts

Functional Parts
* Non-Illustrated Parts

ICE MAKER

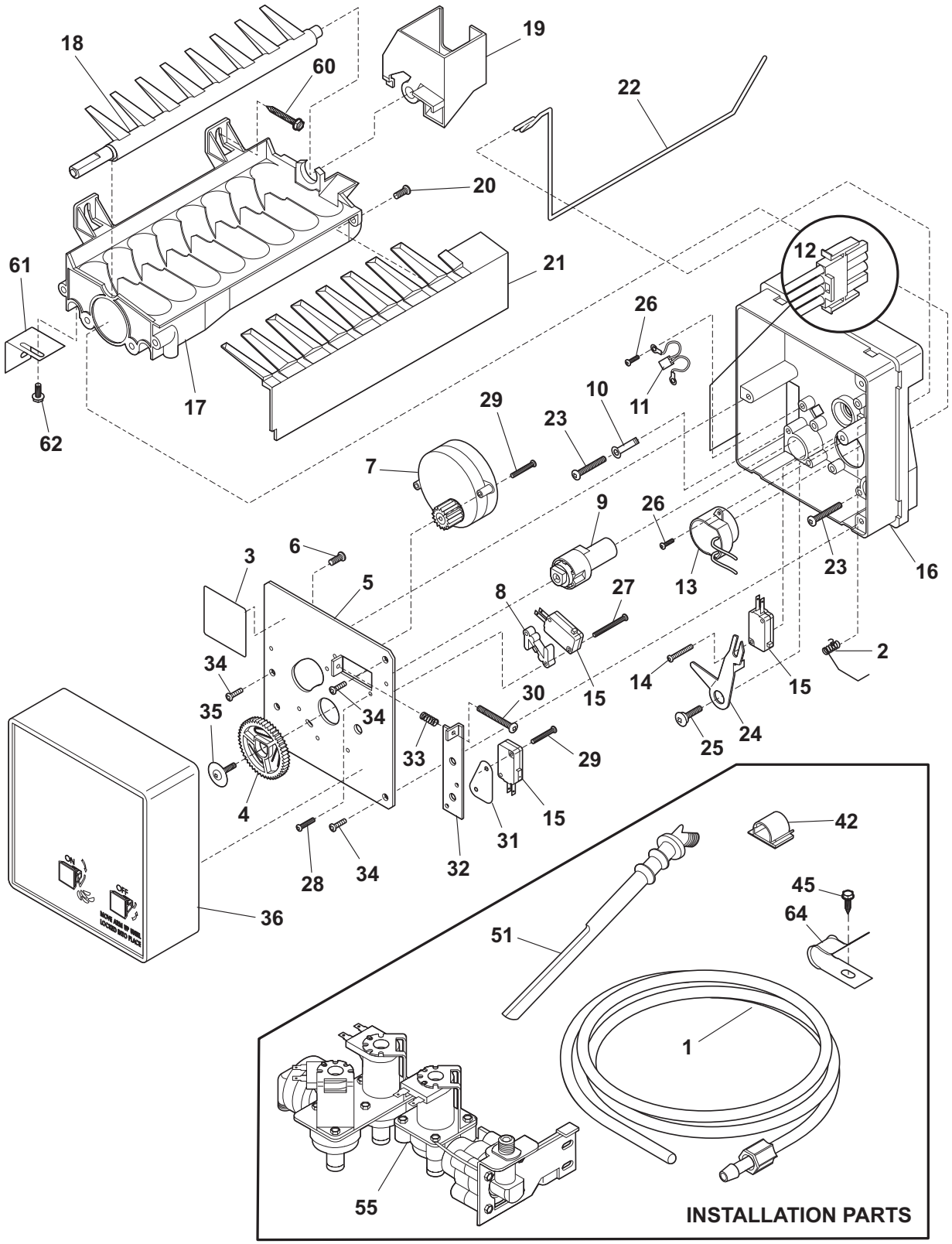

N58I1151-1

ICE MAKER

Model Index: A LGUS2642L (LGUS2642LE0)
B LGUS2642L (LGUS2642LF0)
C LGUS2642L (LGUS2642LM0)
D LGUS2642L (LGUS2642LP0)

POS. NO	PART NO.					DESCRIPTION
1	218976409	A	B	C	D	Tube, water, door
1*	218976419	A	B	C	D	Tube-water inlet, valve to door
1*	218976429	A	B	C	D	Tube-water inlet, 97.50", brown/tan
1*	218976915	A	B	C	D	Tube-water inlet, inlet valve, to I/M inlet
1*	240561701	A	B	C	D	Seal-water inlet, inlet valve, to ice maker
2	5304456650	A	B	C	D	Spring-shutoff arm, ice maker
3	5304456657	A	B	C	D	Nameplate
4	5304456658	A	B	C	D	Gear
5	5304456659	A	B	C	D	Plate-mounting
6	5304456691	A	B	C	D	Screw, M 3x20 #3, valve plate
7 #	5304445222	A	B	C	D	Motor-ice maker Svo
7*	5304445223	A	B	C	D	Spring Beam
8	5304456661	A	B	C	D	Spacer-hold switch
9	5304456662	A	B	C	D	Cam
10	5304456689	A	B	C	D	Washer, nylon
11 #	5304456663	A	B	C	D	Thermal Cutoff, ice maker, complete assy
12	5304456664	A	B	C	D	Harness-wiring
13	5304456665	A	B	C	D	Thermostat, ice maker
14	5304455676	A	B	C	D	Screw, plask, 4x14x3/4
15 #	5304456667	A	B	C	D	Switch-micro, (3)
16	5304456668	A	B	C	D	Support
17	5304456669	A	B	C	D	Mold-ice maker, w/therm cut off
18	5304456670	A	B	C	D	Ejector-ice
18*	241522901	A	B	C	D	Harness-wiring, icmkr/container
19	5304456671	A	B	C	D	Bearing & Inlet, fill cup
20	5304455677	A	B	C	D	Screw, 8-32 x 3/8
21	5304456672	A	B	C	D	Ice Stripper
22	5304456673	A	B	C	D	Shut-off Arm
23	5304456674	A	B	C	D	Screw, M 4x25 #2, mold-to-support, (2)
24	5304456675	A	B	C	D	Lever Arm
25	5304456676	A	B	C	D	Screw, M 4x12.8 #2, lever arm/sprt
26	5304455680	A	B	C	D	Screw, plask, 4-14 x 3/8
27	5304456677	A	B	C	D	Screw, M 3x25 #3, hold switch mtg, (2)
28	5304456660	A	B	C	D	Screw, M 4x6 #2
29	5304456678	A	B	C	D	Screw, M 3x12 #3, (2)
30	5304456679	A	B	C	D	Screw-timing adj, M 4x25 #3
31	5304456680	A	B	C	D	Insulator
32	5304456681	A	B	C	D	Plate-valve switch
33	5304456682	A	B	C	D	Spring, timing adjust
34	5304456683	A	B	C	D	Screw, M 4x12 #2, (3)
35	5304456684	A	B	C	D	Screw
36	5304456685	A	B	C	D	Cover-ice maker
36*	5304456690	A	B	C	D	Label, ID plate
42	218515403	A	B	C	D	Clip-grille
45	5304455650	A	B	C	D	Screw, hex washer head, 8-15A x 0.625, Low Profile
51	241796401	A	B	C	D	Tube-water fill, extension
55 #	241734301	A	B	C	D	Valve-water, triple solenoid

Functional Parts
* Non-Illustrated Parts

ICE MAKER

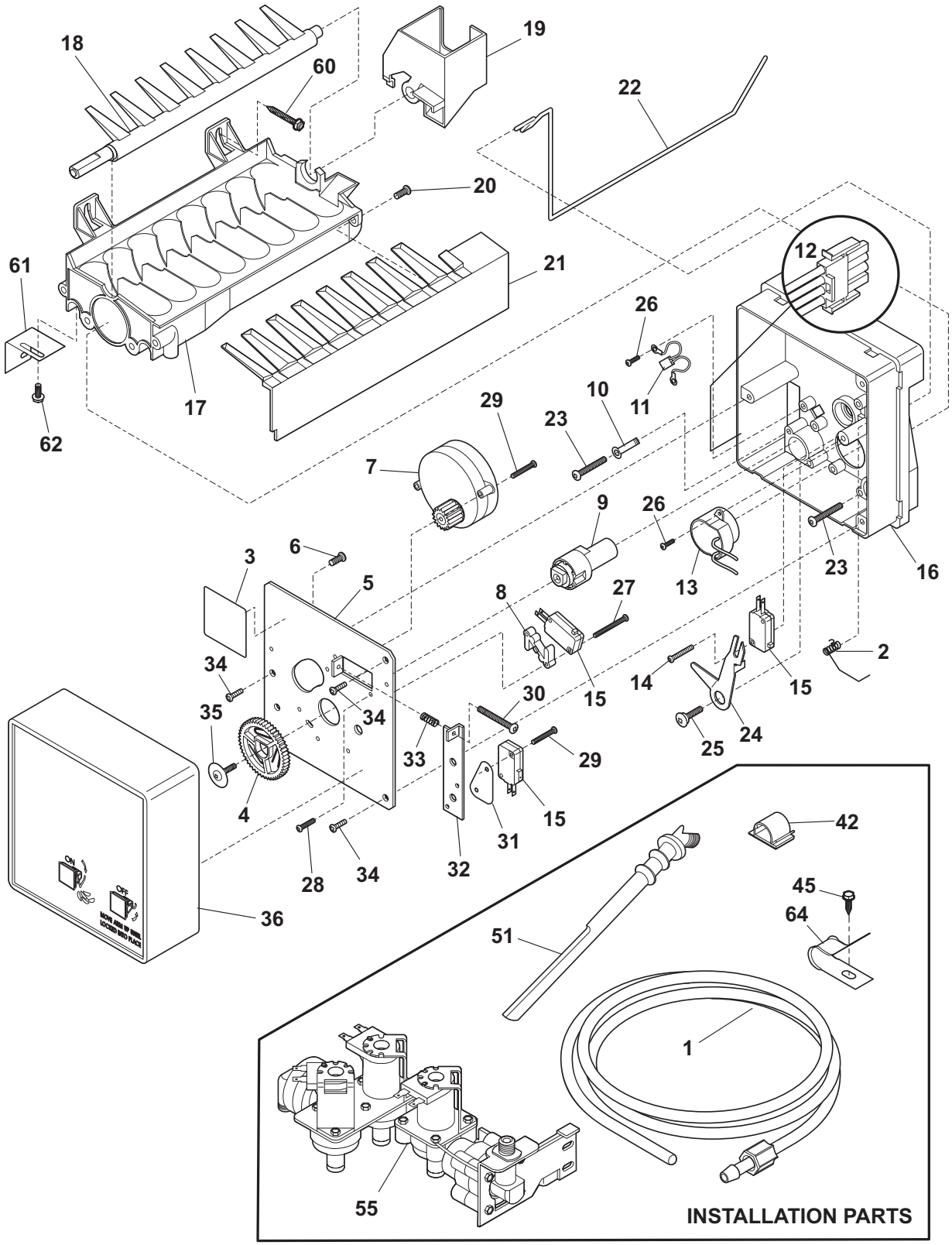

N58I1151-1

ICE MAKER

Model Index: A LGUS2642L (LGUS2642LE0)
B LGUS2642L (LGUS2642LF0)
C LGUS2642L (LGUS2642LM0)
D LGUS2642L (LGUS2642LP0)

POS. NO	PART NO.					DESCRIPTION
55*	218709101	A	B	C	D	Screw, hex head, 10-32 x 0.500
55*	240363602	A	B	C	D	Screw-shoulder
55*	240542901	A	B	C	D	Cap-water valve
60	5303207328	A	B	C	D	Screw, hex washer head, 8-15A x 1.000, (2)
61	5304456686	A	B	C	D	Bracket-leveling, ice maker
62	5304456687	A	B	C	D	Screw-IM brkt mtg, pan hd phillips, 8-32T x 0.375
64	5303001549	A	B	C	D	Clamp, 0.31 ID, steel, copper wtr line
*	242103001	A	B	C	D	Connector-water, straight
*	5304456666	A	B	C	D	Screw, M 3x20 #2, (6)
*	5304456688	A	B	C	D	Terminal
*	5304456692	A	B	C	D	Washer
*	5304456693	A	B	C	D	Nut, M 3.5
*	5304456737	A	B	C	D	Washer
*	241642501	A	B	C	D	Ice Maker, radius cube, 115 V, Svce

WIRING SCHEMATIC

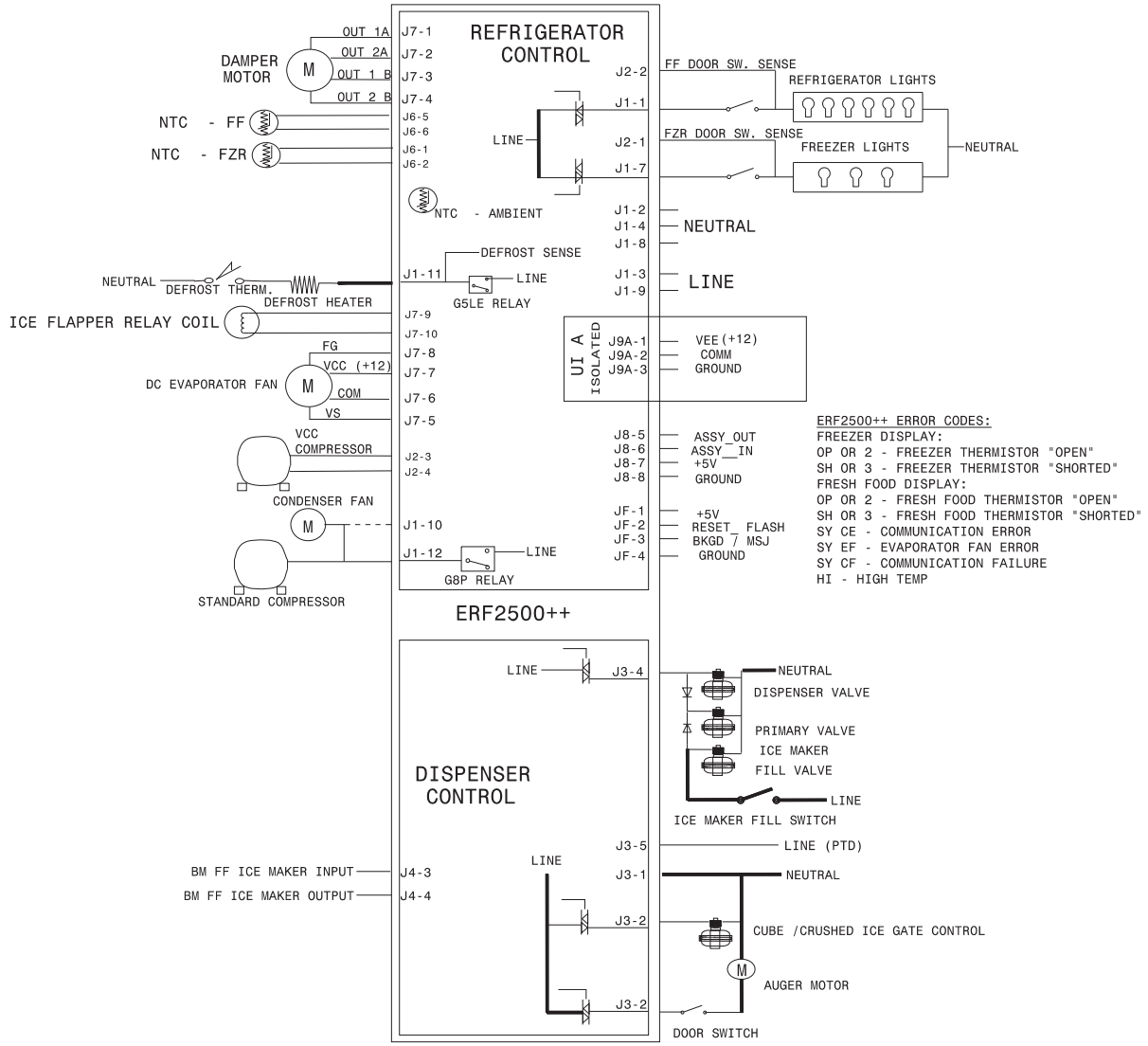

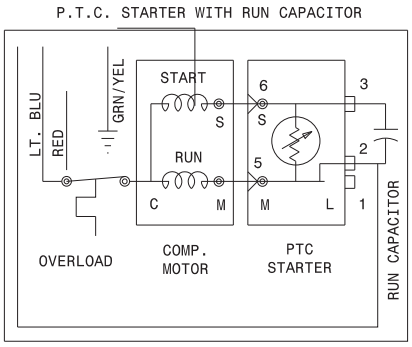

*CAPACITOR IS ONLY USED WITH SOME P.T.C. MODELS

STANDARD AC COMPRESSOR

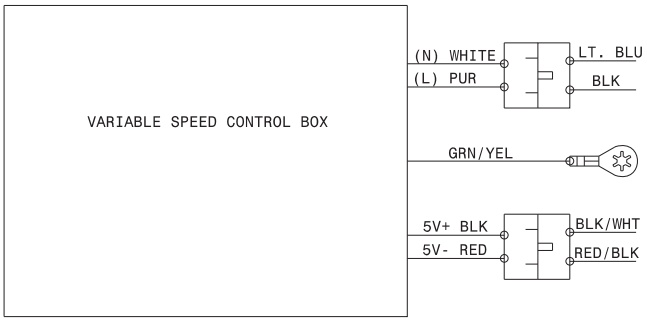

VARIABLE SPEED COMPRESSOR
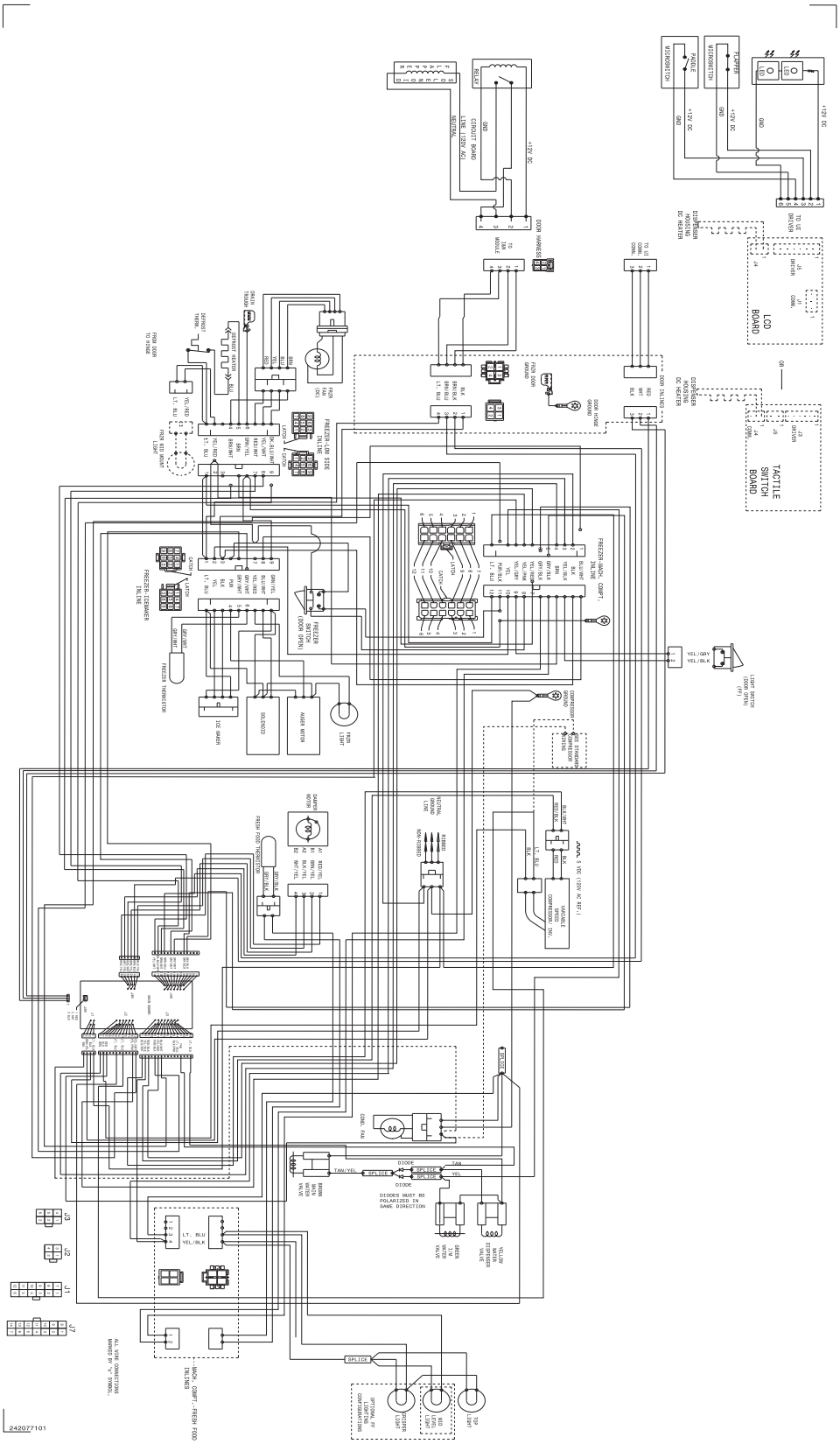
WIRING DIAGRAM